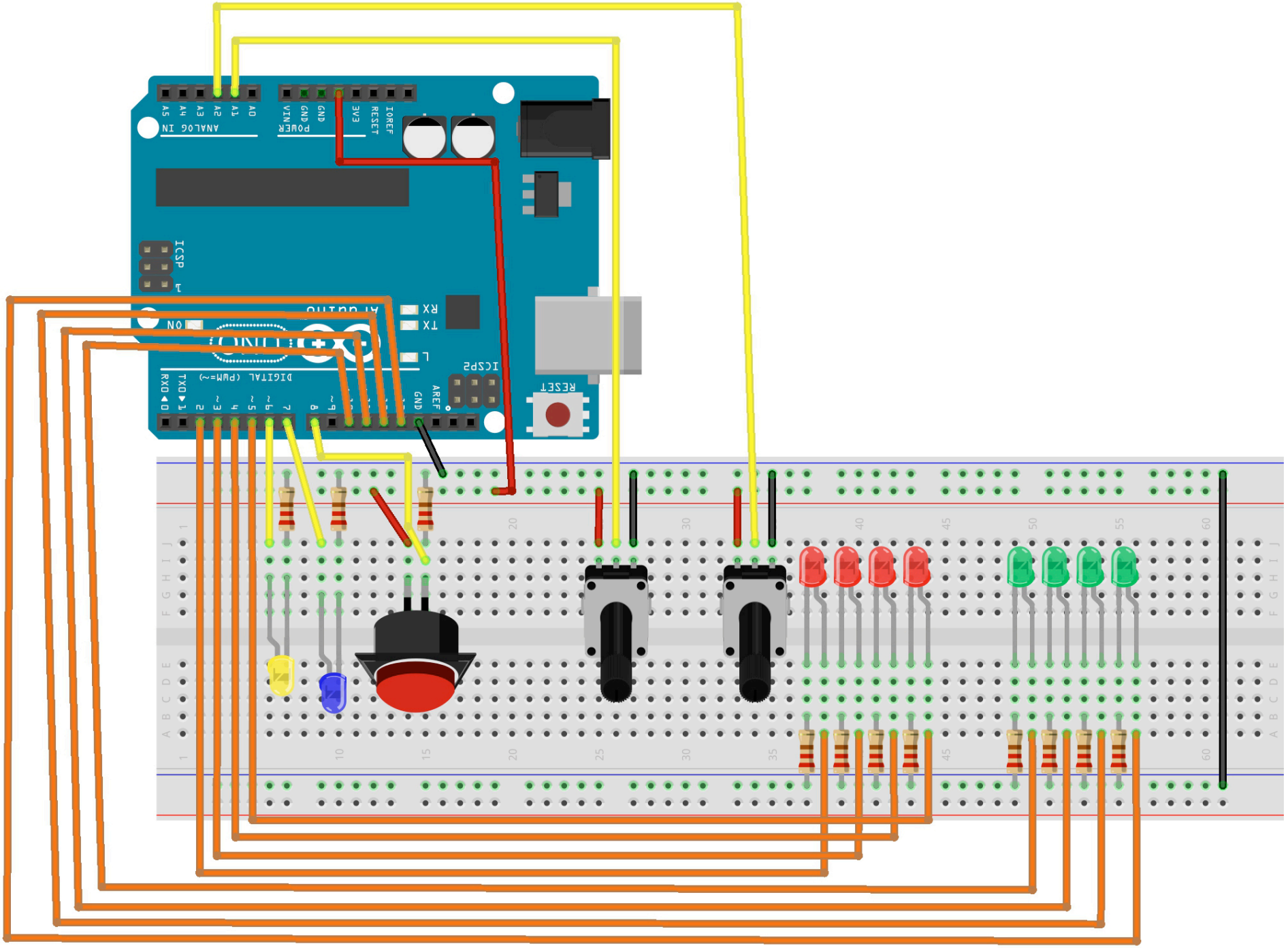
ANALOG IN
POWER
ICSP
ICSP2
RESET
DIGITAL (PWM=~)
ON
RX
TX
L