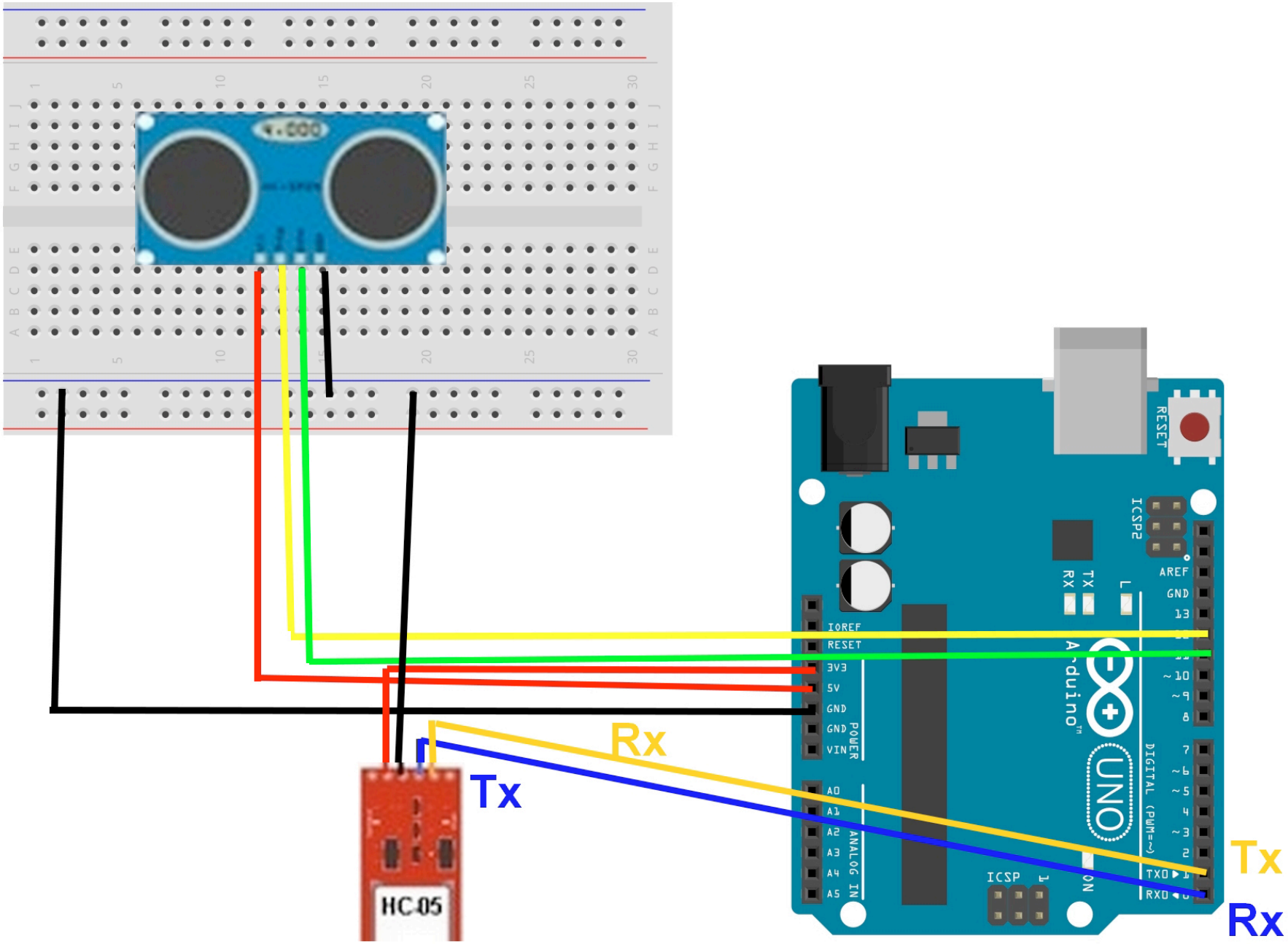
Rx
Tx
HC-05
Tx
Rx
RESET
ICSP2
AREF
GND
13
TX
RX
L
IOREF
RESET
3V3
5V
GND
GND
VIN
POWER
A0
A1
A2
A3
A4
A5
ANALOG IN
Arduino
UNO
DIGITAL (PWM=~)
ICSP
ON