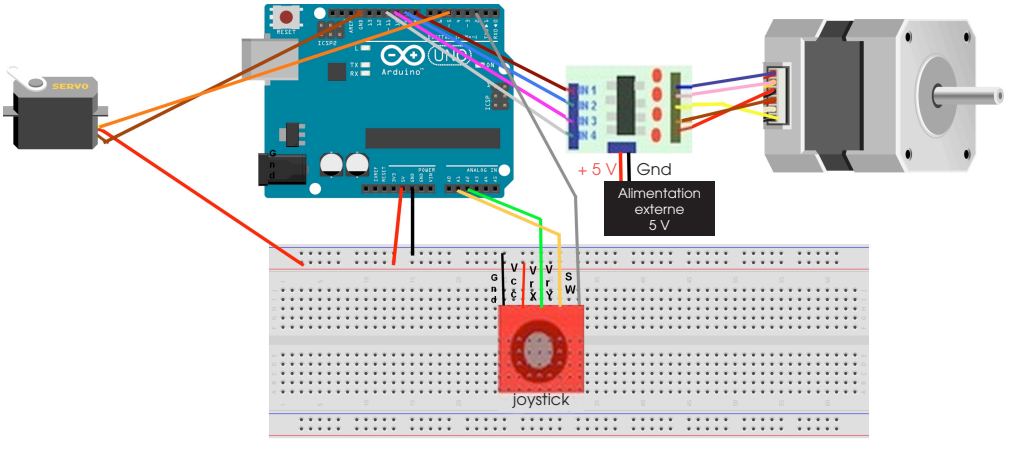
SERVO
RESET
ICSP2
TX
RX
UNO
Arduino
ON
ICSP
POWER
ANALOG IN
IN 1
IN 2
IN 3
IN 4
+ 5 V
Gnd
Alimentation externe 5 V
Gnd
Vcc
Vrx
Vry
SW
joystick