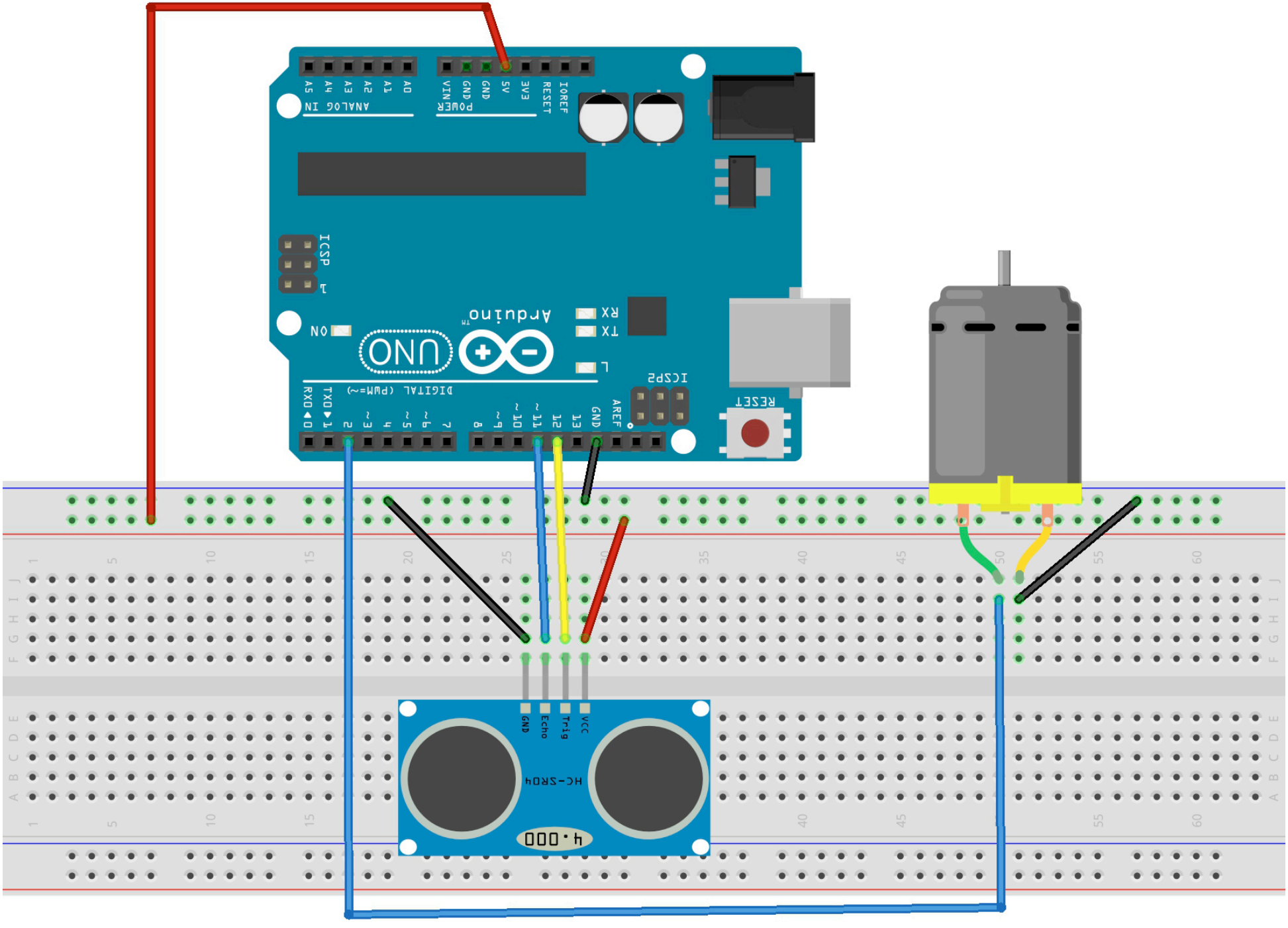
ANALOG IN
A5 A4 A3 A2 A1 A0
POWER
VIN GND GND 5V 3V3 RESET IOREF
ICSP
L
ON
Arduino
UNO
RX
TX
L
ICSP2
RESET
DIGITAL (PWM=~)
RX0 TX0 2 ~3 ~4 ~5 ~6 7 8 ~9 ~10 ~11 12 13 GND AREF
GND Echo Trig VCC
HC-SR04
4.000