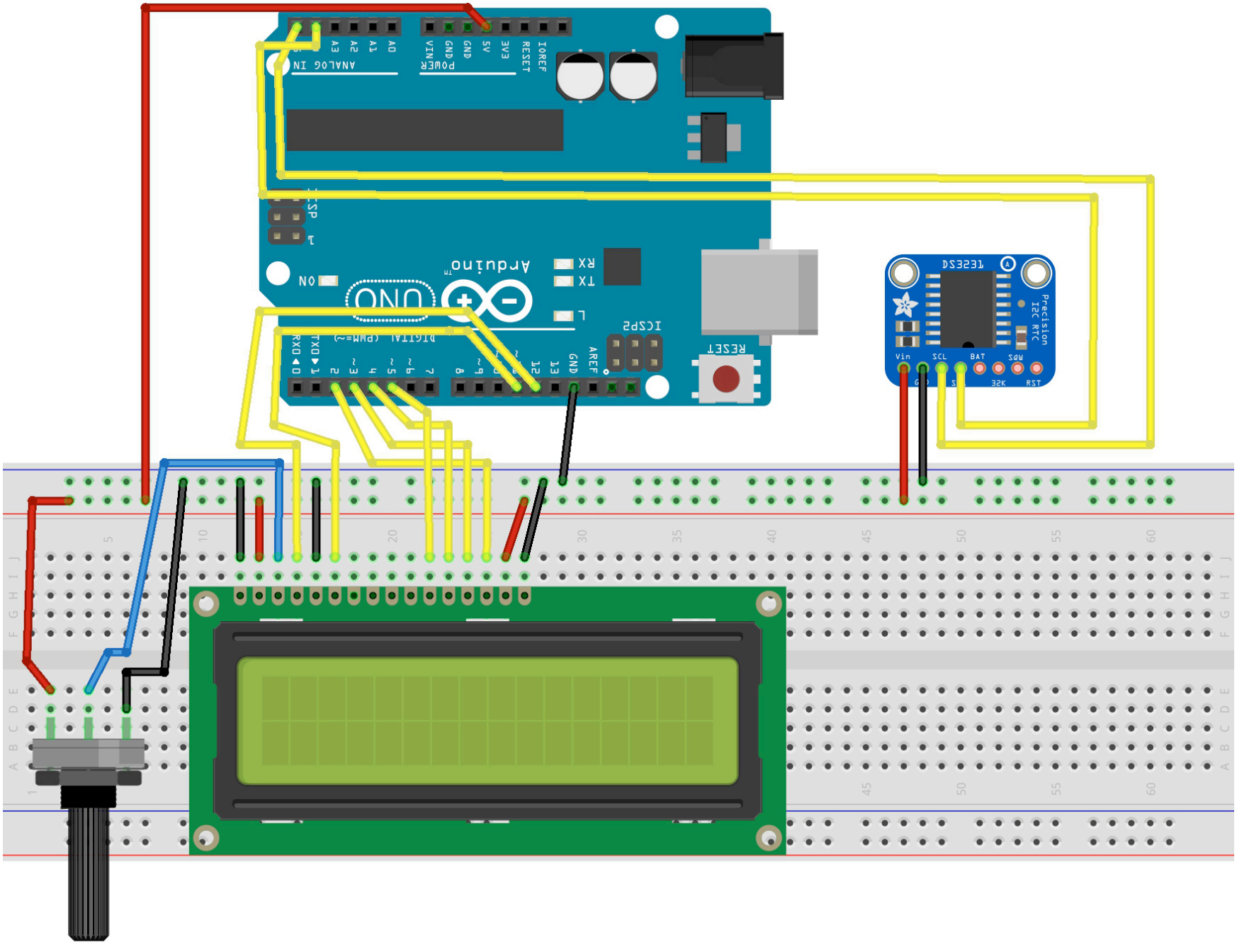
ANALOG IN
POWER
A0
A1
A2
A3
VIN
GND
GND
5V
3V3
RESET
IOREF
ICSP
L
ON
Arduino
UNO
TX
RX
L
ICSP2
RESET
DIGITAL (PWM=~)
RXD◀0
TXD▶1
2
~3
4
~5
~6
7
8
~9
~10
~11
12
13
GND
AREF
DS3231
Precision
I2C RTC
Vin
SCL
BAT
RST
32K