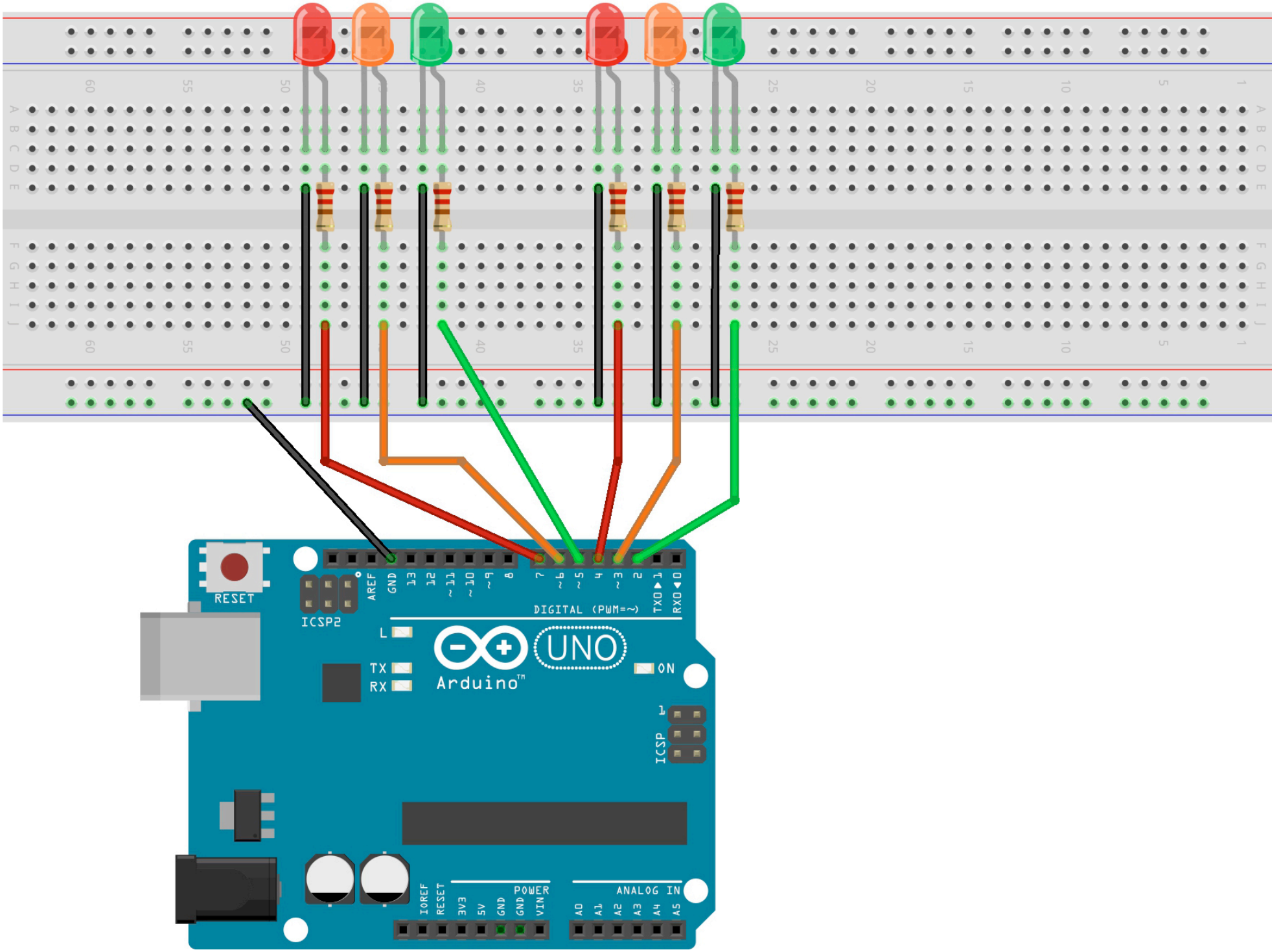
RESET
ICSP2
AREF
GND
13
12
~ 11
~ 10
~ 9
8
7
~ 6
~ 5
4
~ 3
2
TX→ 1
RX← 0
DIGITAL (PWM=~)
L
TX
RX
UNO
Arduino™
ON
ICSP
IOREF
RESET
3V3
5V
GND
GND
VIN
POWER
A0
A1
A2
A3
A4
A5
ANALOG IN